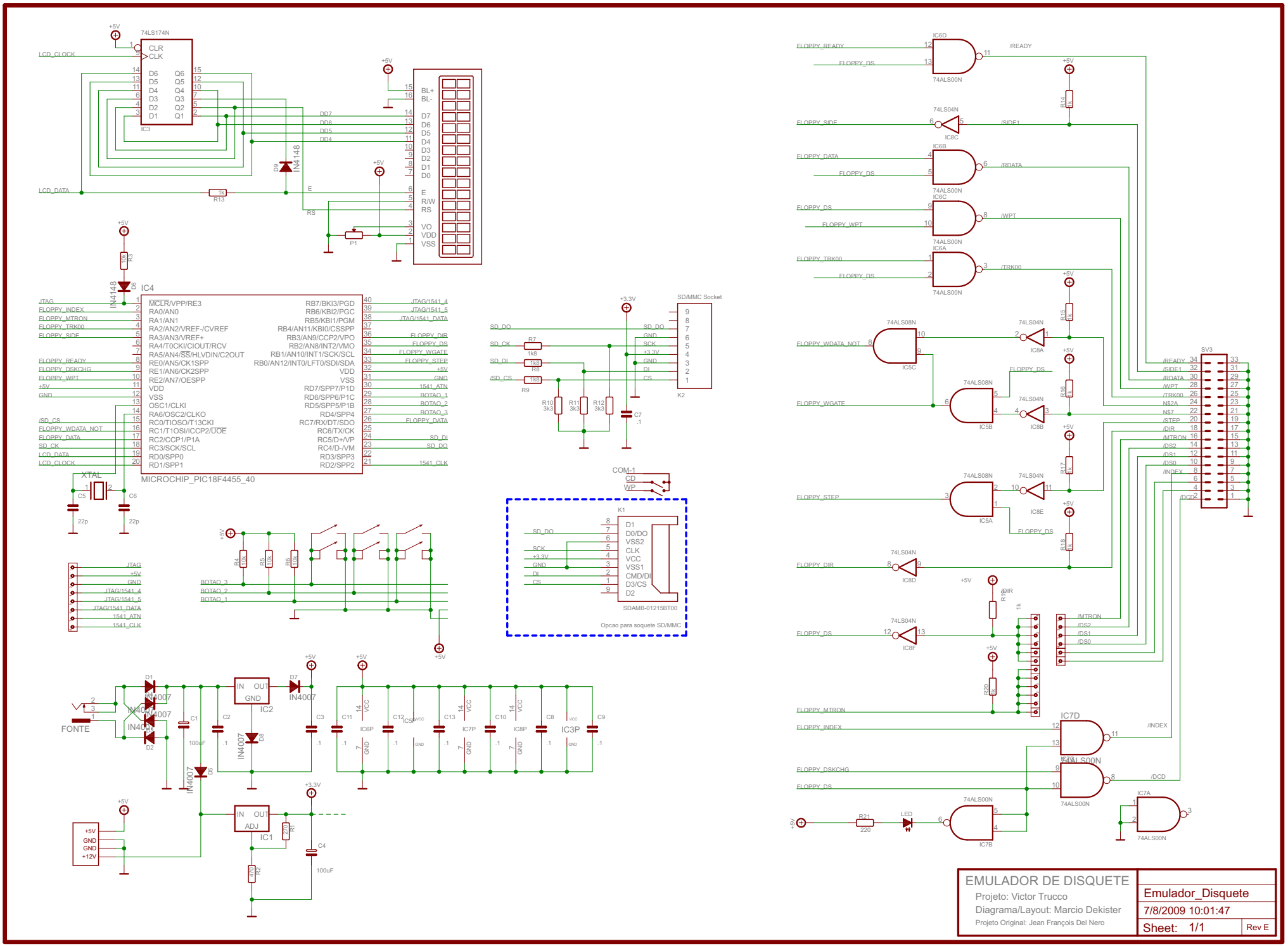

7/8/2009 10:03:51 f=0.70 C:\Documents and Settings\Administrador\Configurações locais\Temporary Internet Files\Content.IE5\RXI3YP61\Emulador_Disquete.sch (Sheet: 1/1)